1
Introduction

1.1 NEED OF RENEWABLE ENERGY SOURCE INTEGRATION

Distribution systems are integrated with renewable energy sources (RES) or distributed generation (DG) at a faster pace due to the growing demand for clean and cost-effective energy. Conventional power generation is predominantly fossil fuel-based, resulting in greenhouse gas emissions. Besides, these plants require colossal space, capital, and rigorous transmission and distribution infrastructure. RES penetration minimizes the loss of power transmission due to their concentration at the load centers. It also increases power reliability by supplying critical loads during power system outages. Due to the reasons above, it is essential to search for alternative forms of energy and enhance their interfacing with the utility grid. The generation of power from natural sources like wind and solar energy has gained prominence due to advances in power electronics infrastructure and control. Due to the large-scale integration of RES with the ability to serve local loads independent of utility, power systems operate as microgrids. These DG sources can also supply surplus power to the utility grids, giving shape to a liberal energy market and reduced pricing. A simple utility grid connected with various sources is shown in Fig. 1.1. The substation transformer steps down the voltage to the distribution level. The relay senses the current variations and sends a trip signal to the circuit breaker in case of abnormalities. The RES sources are connected to the distribution system through an interconnecting transformer (ICT) and suitable converters.

Solar National Mission is an initiative of the Indian government to address the climate change and energy security challenges. It is estimated that a 3 percent coverage of wasteland with solar plants has a potential of 748 GW. With a target of 450 GW RES integration by 2030, efforts are made to increase the solar installation to 100 GW by 2022. As the globe is fast progressing towards green energy, it is imperative to look for interconnected grids for energy exchange to avoid storage from intermittent sources.

1.2 DISTRIBUTION SYSTEM PROTECTION CHALLENGES WITH DG PENETRATION

Although integrating RE sources has many advantages, it brings in new challenges. The various challenges associated with their penetration are mentioned as follows:

Dynamics in fault current

The faults may occur in various components of the distribution system like overhead lines (50%), underground cables (12%), switchgear (12%), control equipment and relays comprising current transformer (CT) and potential transformer (PT) (12%), transformers (10%), and generators (7%). The percentage of fault occurrence is highest in overhead lines. Various faults may occur in distribution system feeder lines, as shown in Fig. 1.2. Single Phase to ground faults (LG) occur most frequently, about 70% with the least fault current magnitude and, therefore, often difficult to detect. Double line faults and double line to ground faults which involve two phases, occur less frequently, about 15%, and 10%, respectively but have magnitudes greater than LG

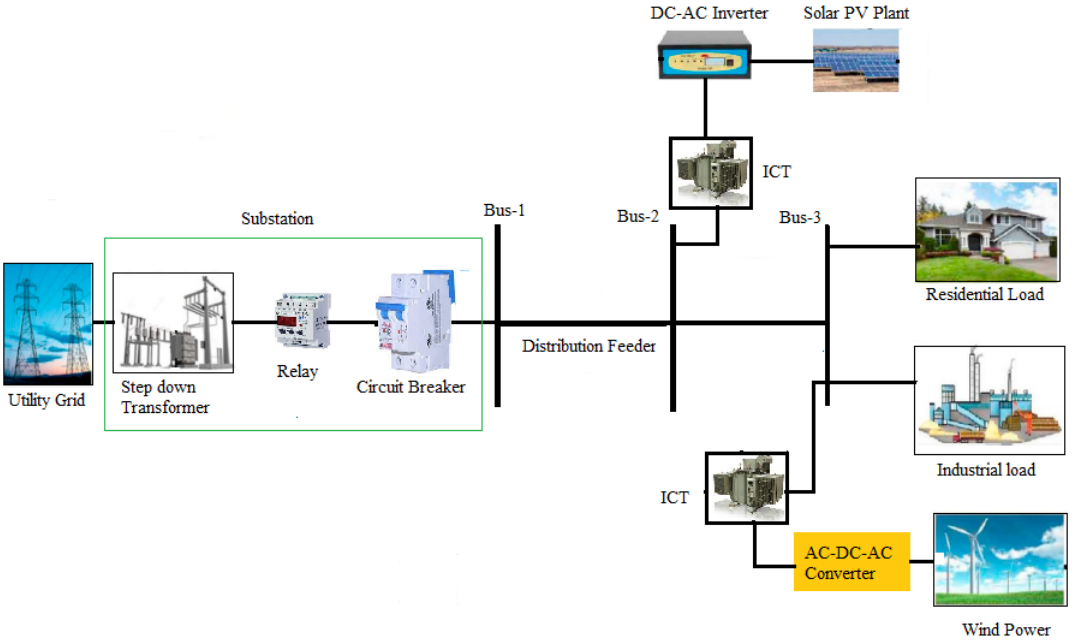

Figure 1.1: Utility grid interfaced with RES and Loads.

faults. The triple line to ground fault or LLLG fault involving all the three phases is most severe but rarely occurs (5%) and is also easily detectable [Gururajapathy *et al.*, 2017]. These faults are associated with transients that may affect the healthy phases in the grounded distribution system through the system neutral. The fault resistance and the grounding also play a crucial role in affecting the fault current magnitude. The fault current transients also depend on the fault type and its inception angle.

The traditional distribution systems have a unidirectional power flow between large power plants and customers. Due to the DG penetration, the passive distribution networks become active, resulting in significant variation in the short circuit and fault current levels.

Various factors affect the increase in fault current level [Dagar *et al.*, 2021], such as:

- Type of networks such as radial or loop.

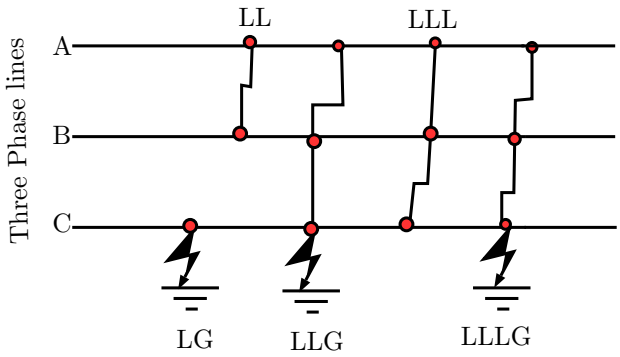

Figure 1.2: Various faults.

- Type of the interconnection transformer connected with the grid.
- Operation of the distribution network in islanded or grid-connected mode.
- Point of DG installation.
- Type of DG and its nature.
- Overall DG size.
- Various power converters (DC-AC or AC-DC) installed with DGs.
- Grid impedance.

Out of all the DGs, the maximum value of fault current is contributed by synchronous generators. In contrast, DGs based on the inverter partially contributed to the fault current level because of their fault current limiting functions. Therefore, the performance of conventional over-current directional relays may fail to observe and respond to the fault, resulting in a failure or misdetection of a fault. This turns out to be even more problematic when the inverter-based DG penetration is high [Baloch *et al.*, 2021]. The mode of operation of the distribution network, such as islanded or grid-connected mode, changes the fault current magnitude and direction. The overcurrent protective devices are unsuitable for protecting these active networks as the short circuit capacity varies with DG integration. The operation of protective devices will be slow or may not be activated due to less fault current in islanded mode [Choudhary *et al.*, 2014], [Bui *et al.*, 2015]. This may lead to maloperation of the protective device and causes false tripping and blinding of protection [Hosseini *et al.*, 2016], as explained further.

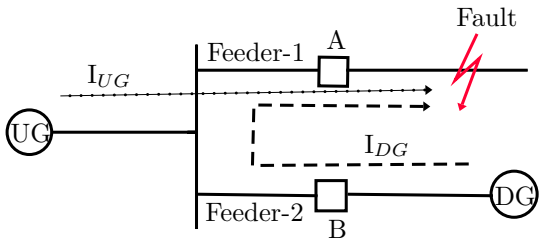

Figure 1.3: False Tripping.

(i) False tripping: False tripping or unnecessary disconnection of a healthy feeder occurs due to the presence of DG. In Fig. 1.3, in the absence of DG in the system, the fault current is contributed by the utility grid itself when a fault occurs in Feeder-1 and relay A would operate. With DG closer to the utility grid, the fault current is also contributed by DG to the neighboring feeder along with the utility grid. In such a scenario, if the fault current I_{DG} is above the pickup value of the relay B in the Feeder-2, it would operate and unnecessarily disconnect the healthy Feeder-2. Therefore the conventional method is inappropriate for the protection in the presence of DGs.

(ii) Blindness of protection: The pickup current of the over-current relay depends on the feeder's impedance. The pickup current is always greater than the feeder's rated current but always below the minimum value of the short circuit current. The penetration of the DG increases the Thevenin equivalent impedance, resulting in a decrease in the fault current magnitude and non-operation of relay A as shown in Fig. 1.4, when a fault occurs on a long feeder far away from the utility. The operation zone of the distance relay gets reduced due to this issue [Dugan and McDermott, 2001].

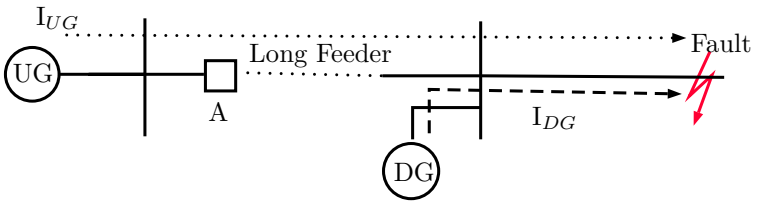

Figure 1.4: Blinding of protection.

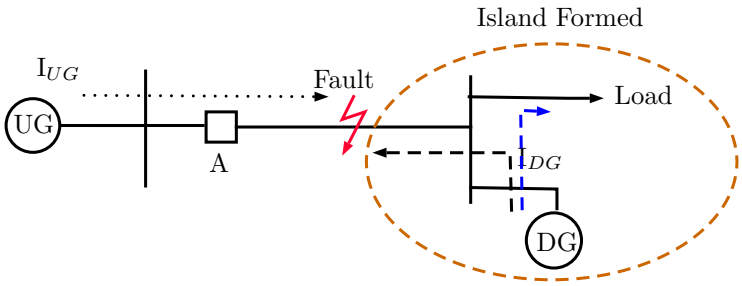

Figure 1.5: Island formation.

Islanding or Loss of mains

Islanding occurs when the RES or distributed generation (DG) feeds the distribution system alone due to its disconnection from the utility accidentally or intentionally, as shown in Fig. 1.5. When a fault occurs on the feeder, relay A operates to disconnect the utility grid from the rest of the system. In such a case, the DG now supplies the entire load forming an island with adverse effects on the power quality. Unplanned islanding is a severe issue as the power is fed without any control or monitoring by the utility personnel [Hasan and Saleh, 2022]. Maloperation of the circuit breaker or the occurrence of a fault in the utility side mainly causes islanding. During unintentional islanding a portion of the network is still working, which may endanger the personnel's life involved in fault clearance. Also, islanding causes significant power quality deterioration, which depends on the nature of the integrated RES source. Islanding causes specific PQDs like voltage sags, swells, and low magnitude impulsive transients for solar RES, wind, and hybrid sources. This event is also associated with a sudden increase in frequency, unlike outage or grid synchronization. The frequency jump is more in the case of either solar or wind when compared to the islanding of sources simultaneously [Chawda *et al.*, 2020].

Other challenges

There are other challenges which are discussed below

- **Reverse power flow**: If the capacity of DG is greater than the local load consumption, the excess power would flow in the reverse direction in the distribution feeder causing power quality issues unless properly planned to supply back to utility [Patnaik *et al.*, 2020].

- **Voltage Profile variation**: Voltage regulators, capacitors, or tap changing at substation transformers achieve voltage regulation in distribution systems. The voltage is regulated, assuming a unidirectional flow of power from the substation to the loads. Due to the integration of DG, the power flows in the reverse direction affecting the usual voltage

regulation practices. Therefore the optimum allocation of the DG is essential to avoid over voltage or under voltage in the system [Sa'ed *et al.*, 2014].

- **Recloser operation**: Reclosers are designed for unidirectional flow of current, which operate with the principle of 'trip and reclose' in the case of temporary faults or nonfaulty transients. Since the transients are momentary, auto reclosing is done to avoid prolonged outages. Also, they are designed to reconnect a passive network to an active utility network. Due to the presence of DG, the recloser operation would be between two active networks, which demands synchronism for reconnection. Otherwise, the DG and other sensitive devices get damaged along with voltage and current variations. Therefore the proper design of reclosers is essential to handle islanding operations.

- **Protection coordination**: The power system protection is designed so that the primary protection devices act first, and backup protection devices must act if they fail. Due to the presence of DGs, the back protection may fail if the DG contributes more fault current than the utility grid. The over-current relay does not sense the reduced fault current from the substation. Proper care must be taken to ensure protection coordination between recloser-fuse as well. Loss of protection coordination must be avoided as it is dependent on the size and location of the DG.

- **Selection of interconnection transformer configuration**: The interconnecting transformer selection is critical in the interaction between the utility grid and the DG. Selection depends on the utility grid's and DG owners' compatibility, as all the configurations have their pros and cons. As the distribution system can be ungrounded, grounded, or grounded with impedance, the choice of the transformers and grounding impedance may cause overvoltages and voltage swell following single-phase to ground faults. It also plays a vital role in the fault current supplied from the substation, affecting the ground fault protection [Patel and Patel, 2020], [Conti, 2009].

- **Grid code upgradation**: The grid code is a technical code that standardizes the various parameters related to incorporating additional resources or networks into the current grid to expand the power system. It specifies the compliance of generation units' performance to interface with the utility grid for ensuring the power system's overall security, planning, and management. The increased DG penetration requires regular upgrades in the grid code to ensure the grid's stability [Etxegarai *et al.*, 2017].

- **Identification of high impedance fault (HIF)**: HIFs are characterized by a very low magnitude of fault current with asymmetric and non-linear nature. They occur when an energized conductor contacts the ground via any high impedance material such as wet sand, dry asphalt, dry grass and sod. The high impedance faults are more persistent in distribution systems than transmission systems because the overhead lines may come in contact with a tree branch. Hence it is challenging to detect these HIFs, especially in the islanded mode of operation.

- **Low virtual inertia**: The inverter interfaced DG integration without any rotatory mass reduces the overall system inertia value. The inverter-based DGs cause fluctuations in system frequency and voltage and hamper the high penetration of RES. This issue needs to be addressed to ensure the overall system stability of microgrid [Magdy *et al.*, 2019].

These distribution systems must be protected against events like unintentional islanding and faults by protection engineers as quickly as possible.

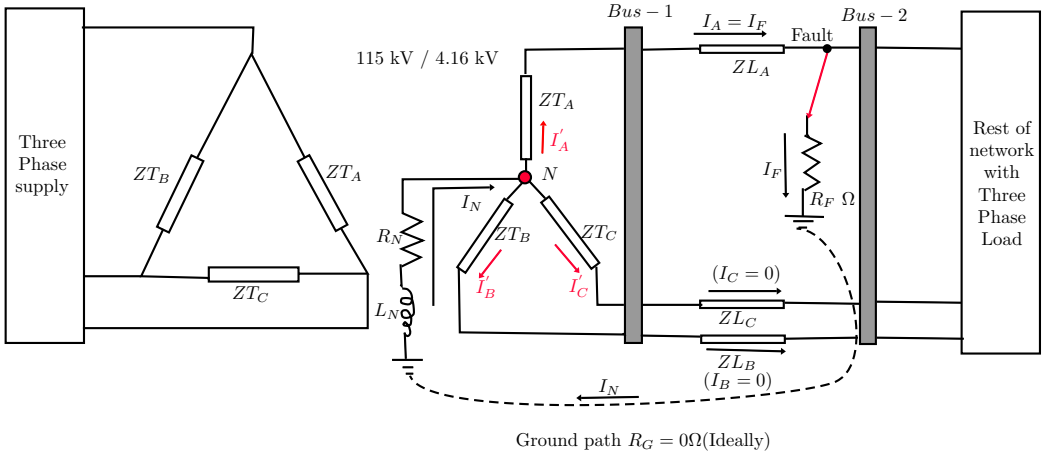

Figure 1.6: AG fault between Bus-1 and Bus-2.

1.3 FAULT ANALYSIS IN GROUNDED DISTRIBUTION SYSTEM

Fault currents involving the ground depend on the distribution system's neutral grounding. Various grounding configurations and their effects on the protection scheme are illustrated in [El-Sherif, 2017]. Of all the grounding schemes, resonant grounding improves the continuity of electric service by decreasing the probability of power outages and damages to the power network. In a neutral grounding system, the transients during fault enter into the healthy phases of the system through the neutral of the system via the grounded path, as shown in Fig. 1.6. It can be observed that the fault current at neutral N enters the phases as $I_A^{'}$,$I_B^{'}$, and $I_C^{'}$. These transients affect the protection system as the healthy phases also experience transients. The zero-sequence network after an AG fault in the system is shown in Fig. 1.7. Here the positive, negative, and zero sequence current components are equal, and obtained as

$$I_0 = I_1 = I_2 = \frac{V(p.u)}{ZT_1 + ZT_2 + ZT_0 + (ZL_1 + ZL_2 + ZL_0) + 3.(Z_N + R_F + R_G)} \tag{1.1}$$

where, ZT_1, ZT_2 and ZT_0 are the positive, negative and zero sequence impedance of transformer respectively. ZL_1, ZL_2 and ZL_0 are the positive, negative and zero sequence impedance of feeder respectively. Z_N is the neutral to ground impedance. R_F is the resistance between fault point to ground. R_G is the resistance offered by ground.

Irrespective of the neutral grounding system, faster detection of fault currents ensures electrical safety by limiting touch and step potentials. From equation (1.1), it can be noted that the ground fault current can be controlled by Z_N only at the substation as the value of R_f is unpredictable due to the fault current path before touching the ground. A bolted fault has $R_F = 0$, while a faulty phase in contact with a tree limb would have high resistance. The ground resistance R_G can be assumed as zero ideally. The value of R_N for the substation is designed based on the curves of permissible touch voltages as a function of fault duration [Mitolo *et al.*, 2019]. Thus, detecting faults in less time plays a significant role in designing R_N while ensuring safety. The inductive reactance part of the impedance Z_N is chosen by trial and error to minimize the transients caused due to the system capacitance, such that the ground fault current would be reduced to the resistive current itself.

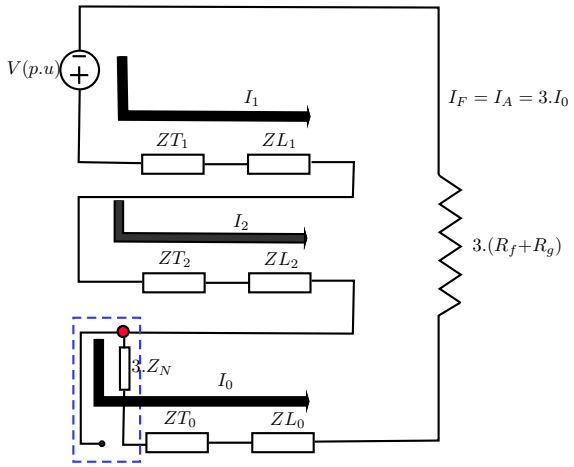

Figure 1.7: Zero sequence network.

1.4 NEED FOR FASTER DIAGNOSIS OF FAULTS AND ISLANDING

Faults and unintentional islanding pose a significant threat to the continuous supply of loads, the safety of the equipment and personnel involved, and power quality issues. Thus the faults and islanding conditions have to be detected at the earliest. If the faults are detected in less time, the suitable circuit breaker could operate quickly. Once the fault is detected, the automatic fault location ensures the quick isolation of the faulty section, and the continuous supply to other healthy parts of the system can be restored. Accidental islanding must be detected to minimize the power quality issues and supply quality power to critical loads. Per IEEE standard 1547 for interconnecting distributed resources with the utility grid, DG energization must be ceased after the islanding detection within two seconds [Karimi *et al.*, 2016].

1.5 MOTIVATION

The current status of the rapid integration of renewable energy sources and the associated protection challenges motivates us to research fast protection algorithms to ensure the safety and reliability of distribution systems. Since a quick detection of islanding and faults ensures the quality of power, safety of equipment, and personnel involved, it is inevitable to explore the best possible solutions to address this problem. Also, fault location is a big challenge in distribution systems due to short feeders. Hence, an automated distribution system demands efficient signal processing and machine learning techniques to ensure the safe, reliable, and economical operation of the utility grid with RE penetration.

1.6 CONTRIBUTION OF THESIS

This thesis contributes in the field distribution system faults and islanding detection in the presence of solar DG by proposing fast-performing protection algorithms. The detection time is reduced to a quarter cycle with the help of Empirical Mode Decomposition based signal processing techniques. Only current signals measured at substation over a moving window are required for complete analysis. A study on the effect of moving window was conducted and concluded that a one-cycle moving window is best suitable. Residue-based features are researched, and found out that the first and last level of decomposition of EMD eliminated a separate feature selection process

involving high-frequency components or the Intrinsic Mode Functions (IMFs). Fault location in short distribution feeders is also accomplished with reasonably good accuracy and minimum error by training the machine learning algorithms such as Decision Tree and Support Vector Machines with extracted features. A novel fault detection algorithm is also proposed using the symmetrical dot pattern technique. This is its first application in the field of power system fault diagnosis. The patterns ensured the elimination of a separate feature extraction process when combined with Convolutional Neural Network. Thus the thesis provides a complete islanding and fault detection, fault classification, and fault location solution, which can be used for online monitoring of distribution systems. The contributions made by the proposed algorithms are enlisted here.

- A threshold-based fault detection, islanding detection, and fault classification algorithm using half cycle post-fault data is proposed using Empirical Mode decomposition followed by a decision tree-based fault location in IEEE 13 bus and 34 bus systems.

- A complete machine learning-based fault and islanding detection, fault classification, and fault location algorithm is proposed using quarter cycle post-fault data. The instantaneous features from Hilbert Huang Transform are fed to the decision tree and support vector machine (SVM) for IEEE 13 bus and 34 bus systems.

- A unique symmetrical dot pattern (SDP) for faulty and healthy phases is generated to visually diagnose the fault condition in IEEE 13 bus and 34 bus systems. An alienation coefficient-based fault index ensured fault detection within 35% of the cycle.

- Feature extraction process is eliminated by feeding the SDPs to a Convolutional Neural Network, which automatically extracts the required features.

These proposed algorithms are tested with switching transients and also by contaminating the signals captured in the presence of noise up to 20 dB signal to noise ratio (SNR).

1.7 LIST OF PUBLICATIONS

- **International Journals**

  1. Shaik, Mahmood, Sandeep Kumar Yadav, and Abdul Gafoor Shaik. *An EMD and Decision Tree-Based Protection Algorithm for the Solar PV Integrated Radial Distribution System.* IEEE Transactions on Industry Applications 57, no. 3 (2021): 2168-2177.

  2. Shaik, Mahmood, Abdul Gafoor Shaik, and Sandeep Kumar Yadav, *Hilbert-Huang Transform and Decision Tree Based Islanding and Fault Recognition In Renewable Energy Penetrated Distribution System*, Sustainable Energy, Grids and Networks 30 (2022): 100606.

  3. Shaik, Mahmood, Sandeep Kumar Yadav, and Abdul Gafoor Shaik. *Renewable Energy Penetrated Distribution system fault diagnosis Using Symmetrical Dot pattern and CNN*, IEEE Systems Journal (Manuscript under revision).

- **International Conferences**

  1. Shaik, Mahmood, Abdul Gafoor Shaik, and Sandeep Kumar Yadav *S-Transform Based Protection Scheme for Distribution System Integrated with Solar Power Plant*" In 2019 2nd International Conference on Smart Grid and Renewable Energy (SGRE), pp. 1-6. IEEE, 2019.

  2. Shaik, Mahmood, Sandeep Kumar Yadav, and Abdul Gafoor Shaik. *Fast Protection Scheme For Distribution System using Hilbert-Huang Transform.* In 2019 IEEE 16th India Council International Conference (INDICON), pp. 1-4. IEEE, 2019.

  3. Shaik, Mahmood, Sandeep Kumar Yadav, and Abdul Gafoor Shaik. *Distribution Feeder Protection Using Uncorrelated Symmetrical Dot Patterns.* In TENCON 2019-2019 IEEE Region 10 Conference (TENCON), pp. 1875-1880. IEEE, 2019.

  4. Shaik, Mahmood, Sandeep Kumar Yadav, and Abdul Gafoor Shaik. *An EMD based protection scheme for distribution system.* In 2018 2nd IEEE International Conference on Power Electronics, Intelligent Control and Energy Systems (ICPEICES), pp. 17-22. IEEE, 2018.

- **Review Paper**

  1. Chawda, Gajendra Singh, Abdul Gafoor Shaik, Shaik, Mahmood, Sanjeevikumar Padmanaban, Jens Bo Holm-Nielsen, Om Prakash Mahela, and Palanisamy Kaliannan. *Comprehensive review on detection and classification of power quality disturbances in utility grid with renewable energy penetration.* IEEE Access 8 (2020): 146807-146830.

1.8 THESIS ORGANIZATION

This thesis is organized in the following six chapters.

Chapter 1, This chapter introduces the need for renewable energy source interfacing with the distribution system, its associated protection challenges, and the dependence on the signal processing and machine learning solutions. An outline of the contribution of the thesis, a list of publications, and its organization are presented.

Chapter 2, This chapter details the survey of the signal processing and machine learning

algorithms for islanding, fault detection, and fault location from the literature with a significant focus on the detection time. It also highlights the research gaps identified.

Chapter 3, This chapter presents the proposed empirical Mode decomposition and decision tree-based fault detection, islanding detection, fault classification, and location algorithm and the results obtained in the distribution network in the presence of solar RES. This chapter briefly introduces the mathematical background of EMD and DT. A detailed discussion of the results obtained is presented.

Chapter 4, This chapter presents the proposed Hilbert Huang Transform and Decision Tree/Support Vector Machine based fault detection, islanding detection, fault classification, and fault location in the distribution network integrated with solar DG. This chapter also briefly introduces the mathematical background of HHT and SVM. A detailed discussion of the results obtained is presented.

Chapter 5, This chapter briefly introduces the mathematical background of the Symmetrical Dot Pattern and the layers of the Convolutional Neural Network. It presents the application of the Symmetrical Dot pattern in generating unique fault patterns and an algorithm for automatic fault detection by a Convolutional Neural Network. The results obtained are discussed in detail here.

Chapter 6, This chapter presents the conclusions of the research work with the future scope of work.