6
SICL Based Down Converter Mixer

6.1 INTRODUCTION

A Microwave Mixer is an essential element in modern communication systems, radar systems, and other applications in the field of microwave engineering. The main purpose of this device is to combine multiple signals with different frequencies to produce output signal with new frequencies, enabling activities such as frequency conversion, modulation, and demodulation [Maas, 1986]. The mixer's conversion loss and port isolations are the essential features. Several authors have used microstrip and SIW technology to enhance the mixer's efficiency by employing matching networks, harmonic balance, bias circuits, and Schottky diodes [Battiboia *et al.*, 1995],[Li and Wu, 2008],[Kuo *et al.*, 2008],[Yang *et al.*, 2010],[Alimenti *et al.*, 2012b],[Alimenti *et al.*, 2013]. However, these methods are susceptible to radiation, surface waves, and conduction loss at millimeter-wave frequencies. On the other hand, conventional waveguide-based probe transition systems are commonly employed for the LO and RF signal at higher frequencies [Zhao *et al.*, 2010]. However, these systems are large and unsuitable for customer premises equipment (CPE). As discussed in chapter 1, substrate integrated coaxial line (SICL) technology can be a promising solution for overcoming some of the limitations encountered with the microstrip and SIW based mixer design at mmWave frequencies [Gatti *et al.*, 2006], [Liu *et al.*, 2013]. In this chapter, a broadband down converter mixer is proposed using a SICL based rat-race coupler and two Schottky diodes at 24-32 GHz.

This chapter describes the mixer design using SICL-based rat-race coupler. The circuit configuration of the mixer is described in Section 6.2, followed by the results and discussion of the proposed mixer in Section 6.3 and the conclusion in Section 6.4.

6.2 DESIGN AND ANALYSIS OF THE DOWN CONVERTER MIXER

6.2.1 Circuit description of mixer

Figure 6.1(a) illustrates the physical layout of a down converter mixer. The design is comprised of two sheets of Taconic TLY-5 substrate, which have a low-loss feature with a dielectric constant (ε_r) of 2.2 and a loss tangent ($\tan\delta$) of 0.0009. Each sheet is 0.25 mm thick and is bonded together using Taconic FR-28 prepreg, which has a dielectric constant of 2.8 and a loss tangent of 0.0014 as shown in Figure 6.1(b). The design consists of a SICL based hybrid-ring coupler, two Schottky diodes (D_1 and D_2), RF chokes, and an IF extraction circuit. The Local Oscillator (LO) and Radio Frequency (RF) ports are isolated using the SICL based hybrid ring. A series of butterfly stubs are introduced in the asymmetry stripline environment, which prevent the RF signal from leaking to the ground pad [Shukla and Mukherjee, 2023]. In this mixer operation, the LO signal is fixed, while the RF signal is varied from 24 to 32 GHz. Using the hybrid ring coupler, the LO

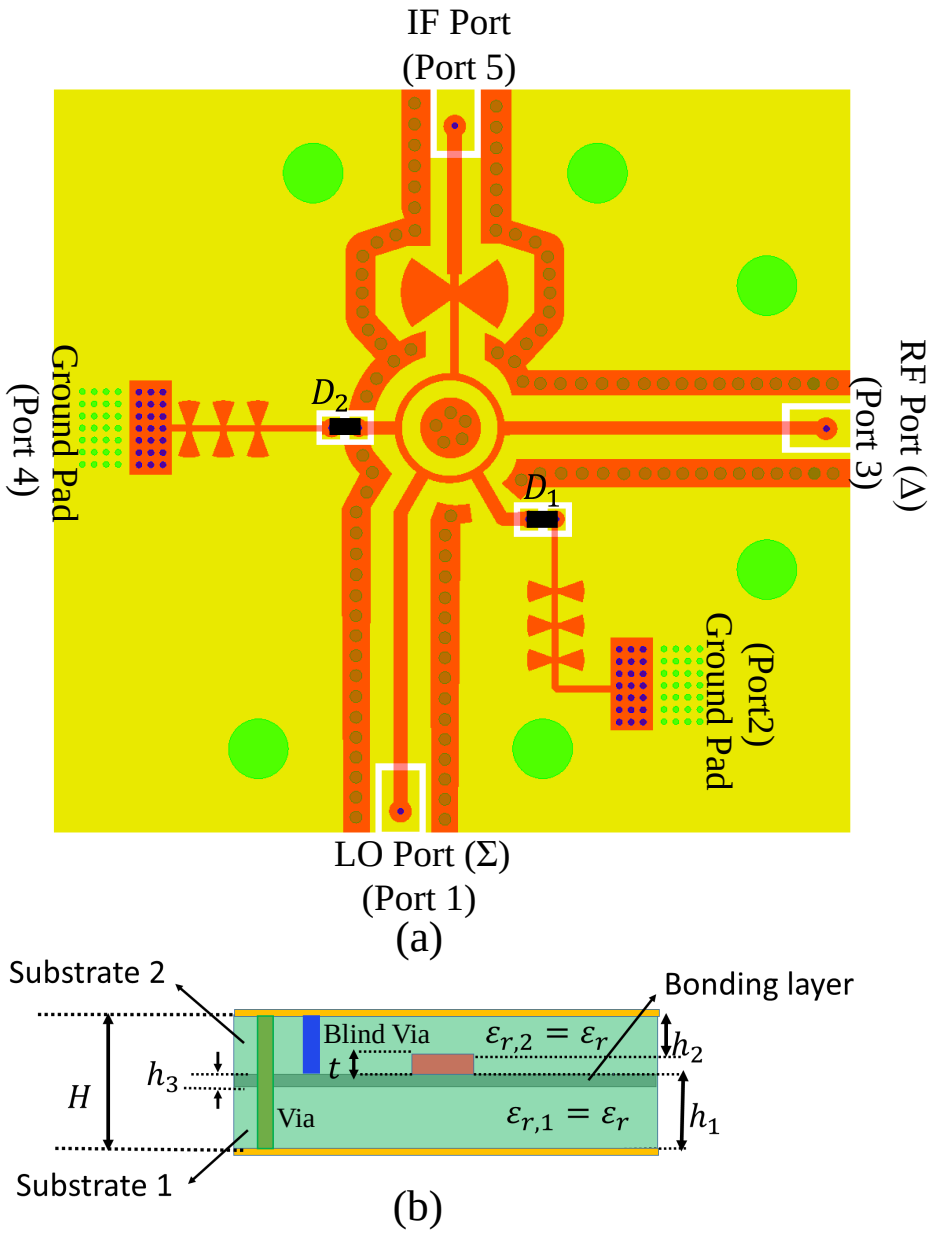

Figure 6.1 : Physical layout of down converter mixer; (b) Stack up of the substrate.

input signal is divided into two equal in-phase signals, while the RF input signal is divided into two equal out-of-phase signals. These signals are combined at the fifth port of the rat-race hybrid ring, where all spurious products with even harmonic components of the mixed signal is canceled out. The IF extraction circuit is used to select the desired mixing signals and extract at the IF output port [Shukla and Mukherjee, 2019],[Shukla and Mukherjee, 2024a].

The use of this mixer offers several advantages, including the avoidance of air bridges and the crossing of transmission lines. These factors contribute to improving circuit performance and facilitating easier manufacturing processes.

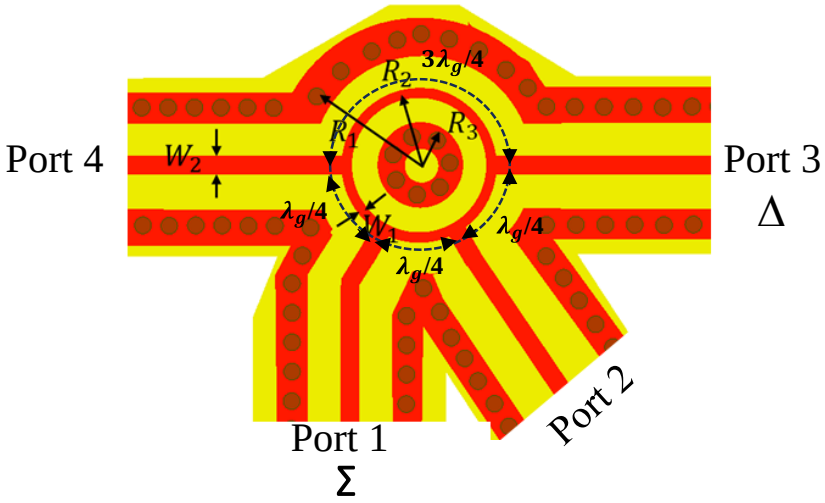

Figure 6.2 : Physical layout of SICL based rat-race coupler.

6.2.2 SICL based rat race coupler at 24-32 GHz

The SICL 3 dB rat-race coupler with center frequency $f_0 = 28$ GHz, shown in Figure 6.2 (b), is designed and simulated with ADS. The parameters $W_1 = 0.26$ mm for $Z_1 = 70.7$ Ω SICL line and $W_2 = 0.45$ mm for $Z_0 = 50$ Ω SICL line, $R_1 = 3.2$ mm,$R_2 = 1.67$ mm, $R_3 = 0.76$ mm, and total substrate height, H = 0.6 mm. Port 1 is the sum port (Σ), and Port 3 is the difference port ($\triangle$). A signal excited on Port 1 will be evenly split into two in-phase signals at Port 2 and Port 4, and Port 3 will be isolated. If the input is applied to Port 3, it will be equally split into two out-of-phase signals at Port 2 and Port 4, and Port 1 will be isolated. The perimeter of the conductor ring with radius R_1 in the middle layer equals 1.5 λ_g, where $\lambda_g = 7.2$ mm is the guide wavelength at 28 GHz. Figures 6.3(a) and 6.3(b) illustrate the reflection coefficients amplitudes, and isolation of the ports for the rat-race coupler. The reflection coefficients of $|S_{11}|$, $|S_{22}|$, $|S_{33}|$, and $|S_{44}|$ are less than -10 dB, and the amplitudes of $|S_{21}|$, $|S_{41}|$, $|S_{23}|$ and $|S_{43}|$ are varied from -3.1 to -3.6 dB at 24-32 GHz. The isolation of $|S_{31}|$ is better than 20 dB. Figure 6.3(c) shows that the phase difference of $|S_{23}|$ and $|S_{43}|$ is varied from 0^0 to 5^0 at 24-32 GHz as the signal is applied to Port 3 ($\triangle$). Figure 6.3(d) shows the phase difference of $|S_{21}|$ and $|S_{41}|$, which are varied from 175^0 to 185^0 at 24-29 GHz and -185^0 to -193^0 at 30-32 GHz as signal applied to Port 1 (Σ).

6.2.3 Design of IF extraction circuit

The circuit is designed for IF extraction using a single butterfly stub of length d_1 with high-impedance transmission line of d_2 and SICL line sections of L_1 and L_2 [Kolahi and Shama, 2018]. Port 2_IF is utilized to extract the IF signal. It is linked to the SICL-based rat-race hybrid ring to avoid air bridges, as shown in Figure 6.4(a). In the circuit, port 2 behaves as an optimal open-circuit impedance against the RF and LO signals to prevent any interference with the mixing frequencies of the hybrid-ring coupler's operation. The S-parameter response of the IF extraction circuit is shown in Figure 6.4(b), where the IF band is DC-8 GHz (IF bandwidth).

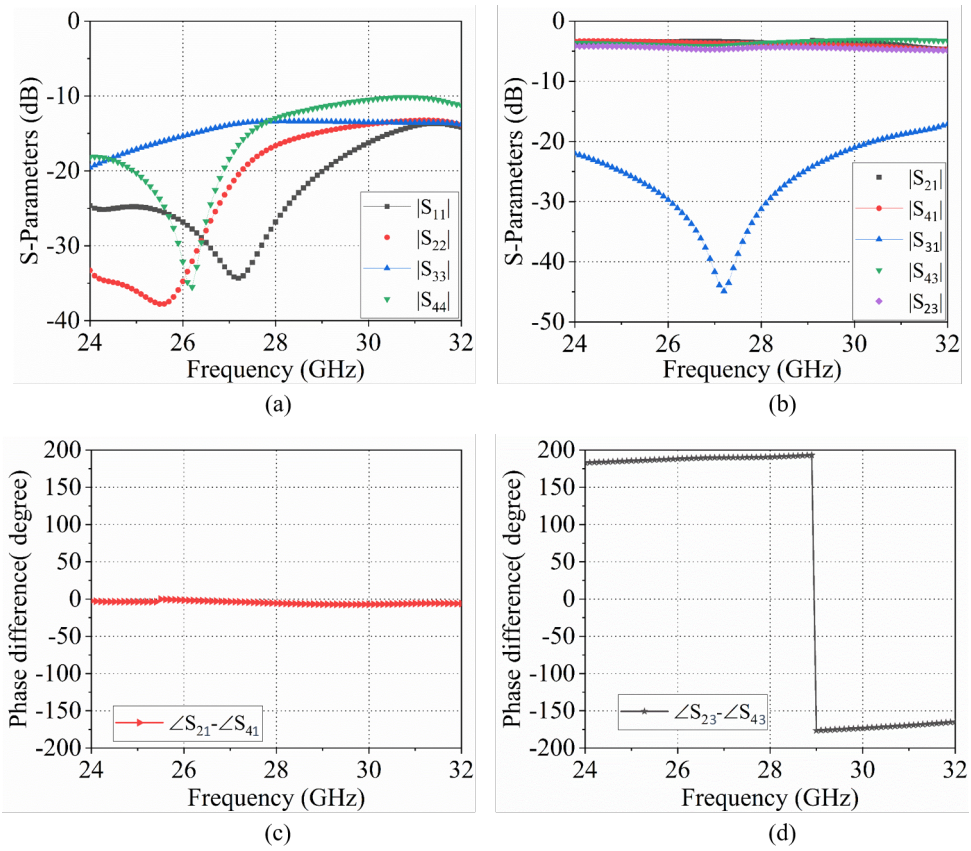

Figure 6.3 : (a) Response of S-Parameters; (b) Response of amplitude between port 2 and 4 with respect to Port1 and Port3 and isolation between Port 1 and Port 3; (c) phase response between S_{21} and S_{41} ; (d) phase response between S_{23} and S_{43}.

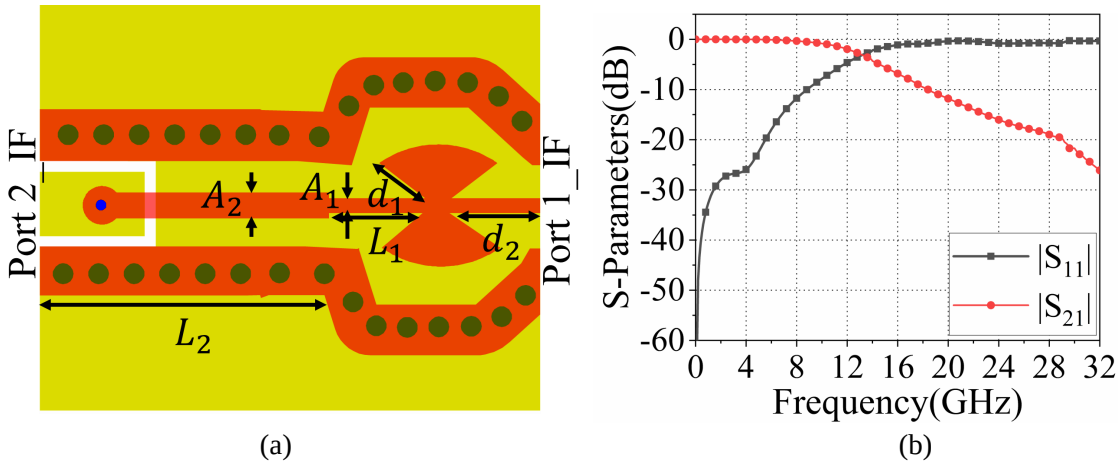

Figure 6.4 : (a) Physical layout of the IF extraction circuit with the dimension of $A_1 = 0.45$ mm, $A_2 = 0.2$ mm, $d_1 = 1.1$ mm, $d_2 = 1.52$ mm, $L_1 = 1.72$ mm, $L_2 = 6.2$ mm;(b) Response of IF extraction circuit.

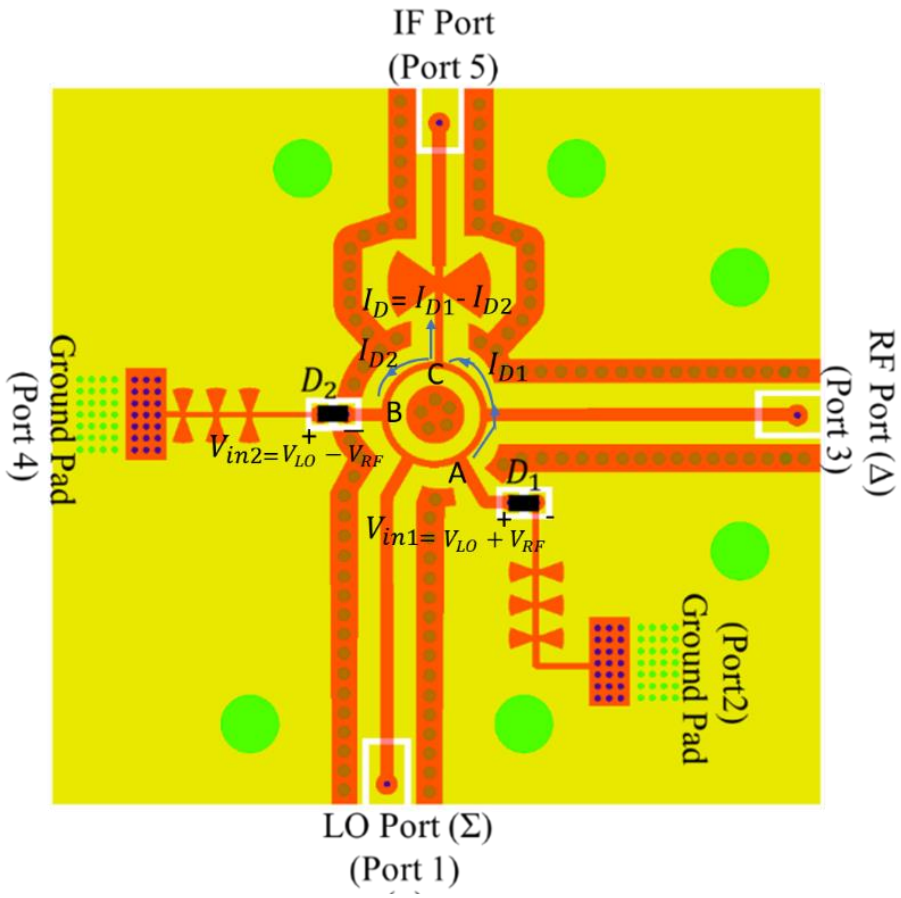

Figure 6.5 : Physical layout of the mixer circuit with current distribution.

6.2.4 Mathematical analysis of the mixer

In Figure 6.5, the cancellation of even-order harmonics in a single balanced mixer can be comprehended through a detailed examination of the diode's non-linear behavior and its interaction with the RF and LO signals. This harmonic cancellation is fundamentally attributed to the symmetry present in the diode's non-linear characteristics, coupled with the balanced configuration of the mixer. The current I_D through a diode as a function of the voltage V_{in} across can be approximated by a power series expansion:

$$I_D(V_{\text{in}}) = I_0 + \alpha_1 V_{\text{in}} + \alpha_2 V_{\text{in}}^2 + \alpha_3 V_{\text{in}}^3 + \ldots \tag{6.1}$$

Here, I_0 represents the saturation current, while α_1, α_2, and α_3 are coefficients that characterize the diode's non-linear response.

In a single balanced mixer, the RF and LO signals are combined and applied to the diode pair. Let the sum and difference signals be denoted as $V_{in1}(t)$ and $V_{in2}(t)$ at points A and B, respectively. For instance, if $V_{in1}(t)$ and $V_{in2}(t)$ are the voltages applied to the two diodes, they are given by:

$$V_{in1}(t) = V_{LO}(t) + V_{RF}(t) \tag{6.2}$$

$$V_{in2}(t) = V_{LO}(t) - V_{RF}(t) \tag{6.3}$$

, where $V_{LO}(t) = A_{LO}\cos(\omega_{LO}t)$ and $V_{RF}(t) = A_{RF}\cos(\omega_{RF}t)$

At point A, the current through the first diode is:

$$I_{D1}(V_{in1}) = I_0 + \alpha_1 V_{in1} + \alpha_2 V_{in1}^2 + \alpha_3 V_{in1}^3 + \ldots \tag{6.4}$$

At point B, the current through the second diode is:

$$I_{D2}(V_{in2}) = I_0 + \alpha_1 V_{in2} + \alpha_2 V_{in2}^2 + \alpha_3 V_{in2}^3 + \ldots \tag{6.5}$$

When the currents through these diodes are combined, the second-order terms cancel out. The net current I_D entering through point C is given by: Substituting the expressions for I_{D1} and I_{D2}

$$I_D = \alpha_1(V_{\text{in1}} - V_{\text{in2}}) + \alpha_2\left(V_{\text{in1}}^2 - V_{\text{in2}}^2\right) + \ldots \tag{6.6}$$

Simplifying further

$$I_D = \alpha_1\left(2V_{\text{RF}}(t)\right) + \alpha_2\left(4V_{\text{RF}}(t) \times V_{\text{LO}}(t)\right) + \ldots \tag{6.7}$$

In Eq (6.7), the diodes are arranged such that their even-order harmonics cancel out. This is typically achieved by using a push-pull configuration with two diodes. The mixer has two branches, and the input signal (RF signal) is split equally between them but 180 degrees out of phase. This means the even-order terms from each branch are equal in magnitude but opposite in phase, leading to their cancellation. This results in improved linearity, reduced distortion, and an enhanced signal-to-noise ratio. The cancellation also increases the mixer's dynamic range, simplifies filtering requirements, and minimizes DC offset issues, all of which contribute to better overall performance in signal processing applications.

6.3 EXPERIMENTAL RESULTS AND DISCUSSION

Figures 6.6 (a) and 6.6 (b) show the fabricated prototypes of the down converter mixer. The proposed mixer has been developed with a SICL -to-GCPW transition applied to three ports, RF, LO, and IF, for the edge mount connector interfaces. The conversion loss is measured from spectrum analyzer MXA N9021B using two sources of model no. RF-VXG M9384B and LO-PSG E8257B. The conversion loss is varied from 32.5 to 5.5 dB in the range of -22 to 10 dBm P_{LO}, where the LO frequency is set at 24 GHz, the RF frequency is set at 28 GHz, and RF power (P_{RF}) is set at -20 dBm as shown in Figure 6.7(a). Further, the conversion loss is varied from 6.8 to 13.1 dB at the RF frequency of 24-32 GHz with $P_{LO} = 7$ dBm and $P_{RF} = -20$ dBm as shown in Figure 6.7(b).The experimental set-up of the proposed mixer is shown in Figure 6.8(a). Next, a vector network analyzer has been used to experimentally characterize the LO to RF, RF to IF, and LO to IF isolation of the proposed mixer. The isolation's responses are reported in Figure 6.8(b), where the isolations (LO/RF/IF) are better than 24 dB at 24-32 GHz. The range of isolation between LO and RF is varied from 25-36 dB at same operating frequency band.

6.4 CONCLUSION

The proposed work presents a novel millimeter-wave downconverter mixer designed using Substrate Integrated Coaxial Line (SICL) technology, which offers a compact, efficient, and

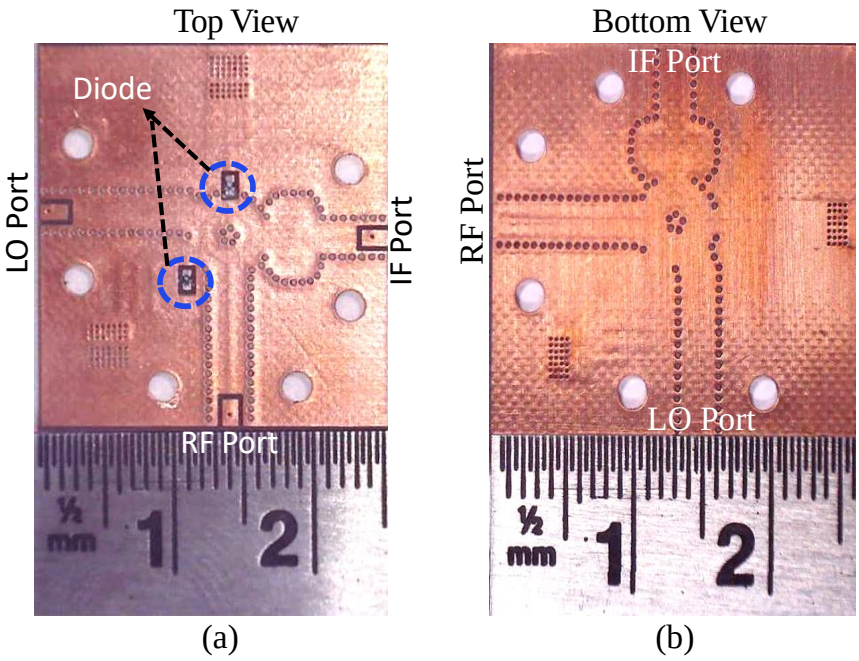

Figure 6.6 : Fabricated prototype of the proposed mixer circuit.

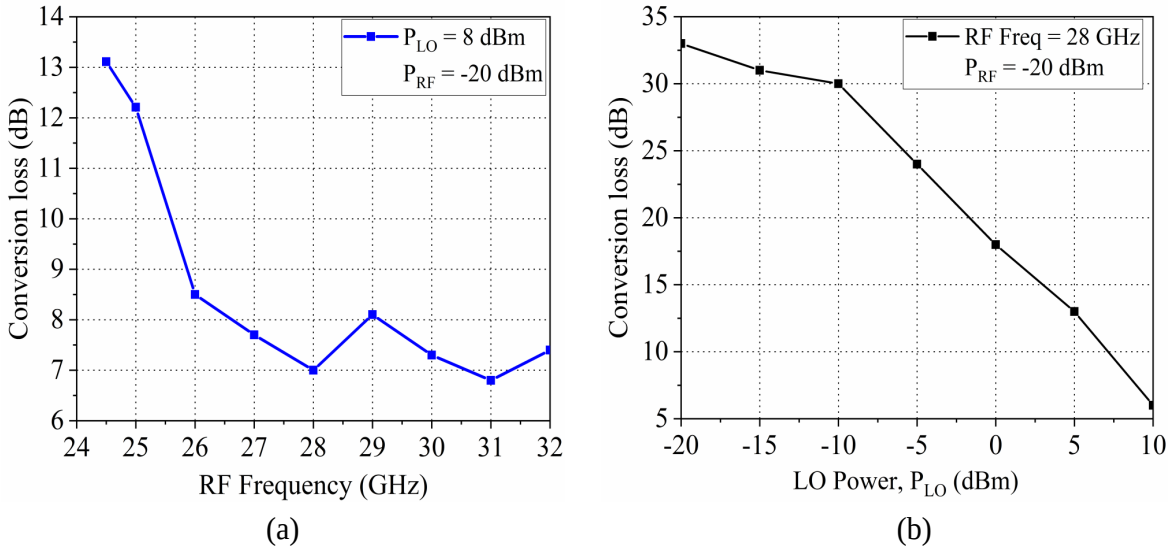

Figure 6.7 : (a) Measured response of conversion loss with LO Power; (b) Measured response of conversion loss with RF frequency.

cost-effective solution for high-frequency applications. The design incorporates a SICL-based rat-race coupler that functions as a five-port hybrid ring, ensuring precise signal distribution within the mixer. By leveraging this structure, the design effectively eliminates the need for conventional air bridges and crossing transmission lines, which are often associated with parasitic effects, increased insertion losses, and complex fabrication processes. A key advantage of the

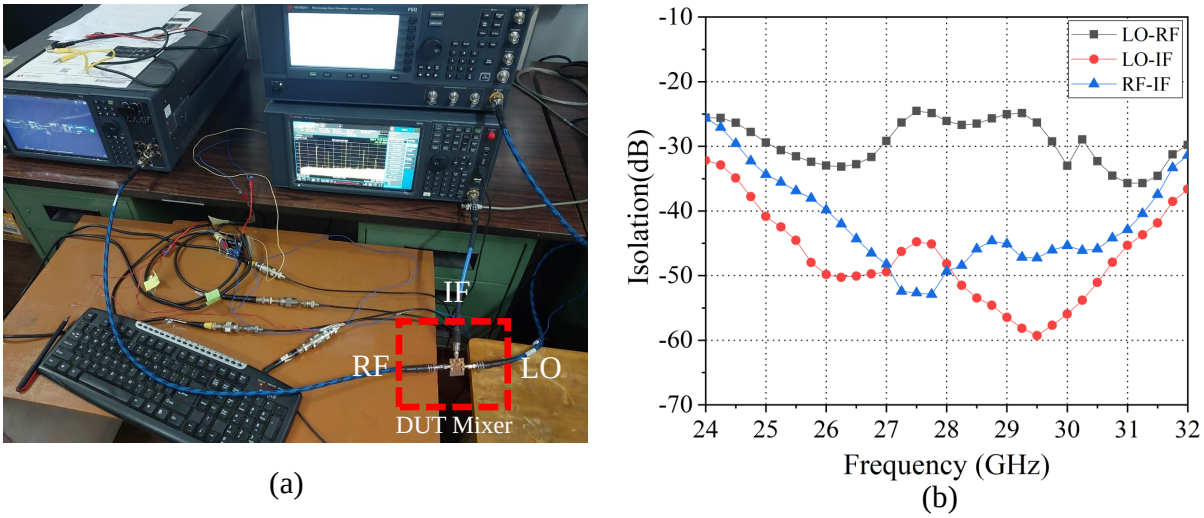

Figure 6.8 : (a) Measurement set-up of the proposed mixer circuit; (b) Response of isolation's between ports LO/RF/IF.

proposed mixer is its ability to maintain a low conversion loss, measured to be below 13.5 dB when converting signals within the 24 GHz to 32 GHz frequency range. This performance benchmark highlights its suitability for millimeter-wave communication and radar systems operating in the n257 and n258 bands of Frequency Range 2 (FR2). The optimized circuit topology, facilitated by SICL technology, enhances isolation between ports and minimizes signal interference, thus ensuring stable downconversion with minimal performance degradation. Furthermore, the integration of SICL technology provides inherent electromagnetic shielding, which significantly reduces undesired radiation and enhances the reliability of the circuit. The planar structure of the SICL-based mixer not only simplifies the manufacturing process but also allows for seamless integration with other RF front-end components, making it highly adaptable for modern millimeter-wave system architectures. This compact and low-loss design is particularly advantageous for applications where size constraints and performance optimization are critical, such as 5G wireless networks, satellite communications, and advanced radar systems. Overall, the proposed downconverter mixer demonstrates a significant advancement in millimeter-wave circuit design by offering superior electrical performance while maintaining cost efficiency. With its robust architecture, reduced conversion loss, and enhanced isolation properties, this mixer serves as a promising solution for next-generation high-frequency communication and sensing applications, ensuring reliable operation across the specified millimeter-wave spectrum.